PATHWAY® Modular Access System
Adjustable Elbow and Closure Elbow Replacement

Addendum

This addendum is intended to be used in conjunction with the PATHWAY® Modular Access System Assembly Manual

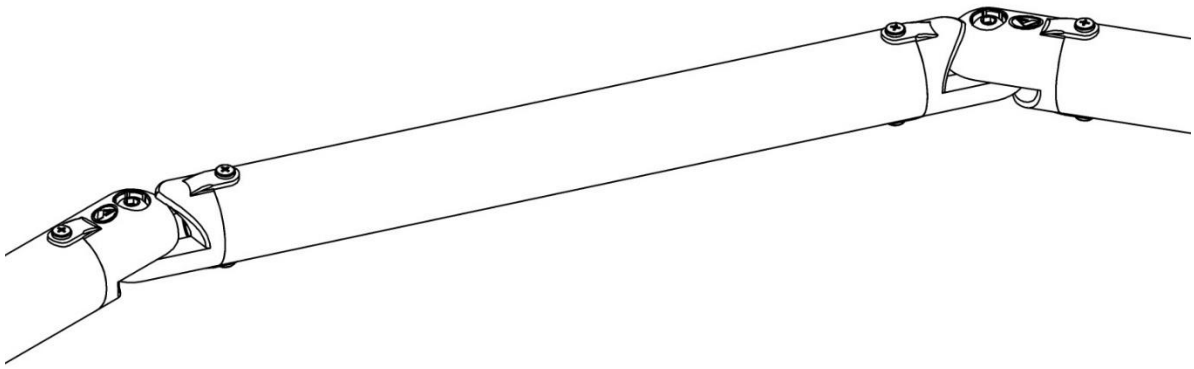

LIFETIME WARRANTY. Please register at www.ezaccess.com/warranty-satisfaction.
© EZ-ACCESS®, a division of Homecare Products, Inc. *All rights reserved.*
All text and images contained in this document are proprietary and may not be shared, modified, distributed, reproduced, or reused without the express written permission of EZ-ACCESS.

Manufactured in the USA

19719 REV 01-22-2021

INTRODUCTION

This addendum describes the installation of "new" polymer elbows in the PATHWAY® Modular Access System. Use this addendum in conjunction with the PATHWAY® Modular Access System Assembly Manual.

The term "system" refers to the entire PATHWAY® Modular Access System, including any gates, stairs, ramps, platforms, risers, handrails, supports, transition plates, transition bridges, landing pads, and any/all hardware and components which are intended to be assembled on the PATHWAY® Modular Access System.

ATTENTION INSTALLER and END USER

- For residential use only.
- Weight Capacity: 850 lbs.; do not exceed Weight Capacity.
- Prior to use, read and understand this manual and all other applicable manuals, including supplements and addendums, if any, and warning labels, in their entirety. Learn and understand the location and function of all features, rated loads, safety devices, and labels before use. If you do not understand which manuals apply, or their content, do not use the PATHWAY® Modular Access System and call (877) 233-6592 for further information.
- Leave this Assembly Manual Addendum with the end user.

TOOLS TYPICALLY REQUIRED

- ✓ RATCHET WITH 1/2" DEEP WELL SOCKET OR 1/2" WRENCH
- ✓ 1/8" DRILL BIT
- ✓ 5/32" T-HANDLE ALLEN WRENCH OR SIMILAR TOOL
- ✓ 3/16" ALLEN WRENCH
- ✓ #2 PHILLIPS HEAD SCREWDRIVER
- ✓ POWER DRILL
- ✓ BOX KNIFE
- ✓ 25' TAPE MEASURE
- ✓ LEVEL
- ✓ RUBBER MALLET
- ✓ FILE

SYMBOL MEANINGS, WARNINGS, AND NOTES

⚠ The **WARNING** symbol indicates a potentially hazardous condition/situation. The safety warnings throughout this manual, and on your equipment, if any, are for the protection of people and property. Failure by any operator to abide by safety warnings will result in a waiver of all liabilities, loss of your warranty, and could result in equipment damage and or failure, property damage, risk of serious bodily injury, and or death. The symbol may appear in various colors and in conjunction with other symbols and with or without the written word "WARNING".

✋ The **NOTE** symbol indicates important information. Failure to obey all notes could result in improper operation, less-than-optimum equipment performance, and at the sole discretion of EZ-ACCESS may void your warranty. The symbol may appear in various colors and in conjunction with other symbols and with or without the written word "NOTE".

WARNINGS

- Weight Capacity: 850 lbs.; do not exceed Weight Capacity.
- Prior to use, read and understand this manual and all other applicable manuals, including supplements and addendums, if any, and warning labels, in their entirety. Learn and understand the location and function of all features, rated loads, safety devices, and labels before use. If you do not understand which manuals apply, or their content, do not use the PATHWAY® Modular Access System and call (877) 233-6592 for further information.
- Follow all warnings and safety directives.
- To obtain copies of instructions, warnings, and labels, call (877) 233-6592.
- Professional installation, by an EZ-ACCESS approved technician, is required.
- This system is made from aluminum. Aluminum is electrically conductive. Do not lay power cords on, under, or across electrically conductive materials, such as this system. Do not use system near exposed wiring or hang lights or electrical cords from system.
- Never place on, under, or attach to the system anything EZ-ACCESS did not supply. Only attach options to the system that EZ-ACCESS supplied and only in the manner EZ-ACCESS indicates.
- Only use components supplied or approved by EZ-ACCESS with system.
- Do not use any part of the system to support, attach, or hang planters, baskets, lights, ropes, cords, decoration, fabrics, or other ornaments or furnishings.
- System surfaces may become slippery when wet; use extra caution when system surfaces are wet.
- Use system only with a qualified helper.
- When using mobility devices, always use your mobility device's lap belt.
- When using mobility equipment, refer to your mobility equipment manufacturer for the proper degree of incline/decline and chair direction before using ramp.
- This product must be installed and maintained as specified in this manual and per your applicable local codes. Ask your local EZ-ACCESS approved technician for more information.
- Use caution at all times. Proper maintenance and upkeep to the system is vital. Call (877) 233-6592 to inquire about inspections and service.
- Always use handrails for added stability.
- Before each use, visually inspect the step to ensure that all parts are in good condition and that the system is free of any damage. If any part of the system appears damaged, loose, or missing, do not use until repaired by an EZ ACCESS approved technician.
- Annually (more frequent in harsher environments) inspect all fasteners and verify all nuts, bolts, screws, and other fasteners are undamaged and secure. If any part of the system appears damaged, loose, or missing, do not use until repaired by an EZ ACCESS approved technician.
- Do not tamper with, attempt to repair, or modify any part of the system. Only EZ-ACCESS approved technicians may provide service.
- Do not lean on, walk on, or otherwise bear weight on the system until installation is complete.
- Consult local building codes for information on securing system for environmental loads.
- Do not use if surfaces are cluttered, obstructed, or unsafe.
- At all times, keep the system clear of dirt, leaves, and other debris that may accumulate on the surface. Simply sweeping the system or using a garden hose will usually suffice, but, if needed, use a damp cloth or soft brush with mild dish soap and water (avoid alkaline solutions). Rinse well and use extra caution when system surface is wet.
- If snow and or ice is present on the system, remove accumulations before use. Please refer to 'DEICING SECTION' for more information.
- Before each use, confirm the system is level and positioned securely. Periodically check for ground shifts and make any necessary adjustments.
- Do not sit, stand, or climb on guards, gates, or handrails.
- Do not play on or around system, including, but not limited to, running, jumping, bicycles, scooters, skateboards, etc.
- Properly support and restrain system in transit or storage.
- If you have any questions, or would like additional care, usage, or general safety information, please call (877) 233-6592.

1. ELBOW DESCRIPTIONS

1.1. For comparison and reference, FIG. 1.1 shows the original adjustable elbow and closure elbow and the “new” adjustable elbow and closure elbow with attachment tabs. The “tabs” are a new feature and are used as a location guide for inserting the #10-18 X 1/2" self-drilling, self-tapping pan head Philips screws (4 per elbow), which secure the elbows in place.

1.2. Another difference is that the “new” elbows simply press into the 1-1/2” diameter handrail tube, rather than having an internal setscrew which expands the elbow in the tube, and the “new” elbow does not have a removable center insert. The “new” adjustable elbow also includes an elbow collar used in converting an adjustable elbow to a closure elbow.

ADJUSTABLE ELBOW COMPARISON
(ITEMS NOT TO SCALE)

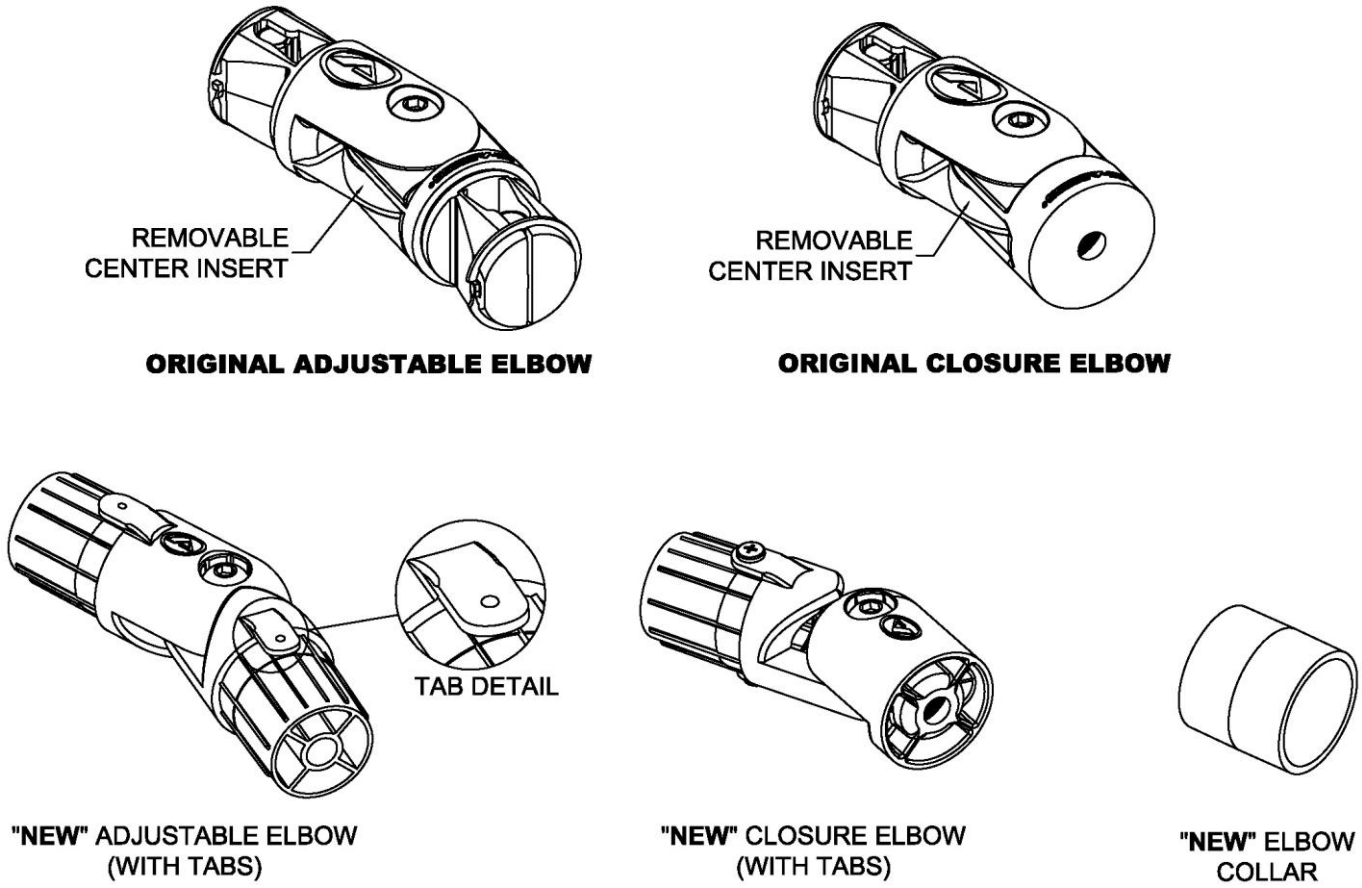

FIG. 1.1

2. CONNECT TWO 1-1/2” DIAMETER TUBES

2.1. The procedure for connecting two 1-1/2” diameter tubes ‘(tube’) is the same regardless of where the connection is located. First insert the adjustable elbows into the ends of the tubes to be connected (FIG. 2.1).

2.2. Loosen (but do not remove) the 5/16”-18 elbow assembly screws. Align the two 1-1/2” diameter faces of the opposing adjustable elbows and make sure the opposing flat faces are parallel then retighten the assembly screws (FIG. 2.1).

2.3. Measure the distance between the two 1-1/2” diameter faces (FIG. 2.1).

2.4. Cut a tube to fit the distance measured in the previous step.

2.5. Using a metal file, smooth all sharp edges from cutting the tube.

2.6. Disassemble the adjustable elbows by removing the 5/16”-18 elbow assembly screws and nuts but do not remove the adjustable elbow halves from the tubes being connected.

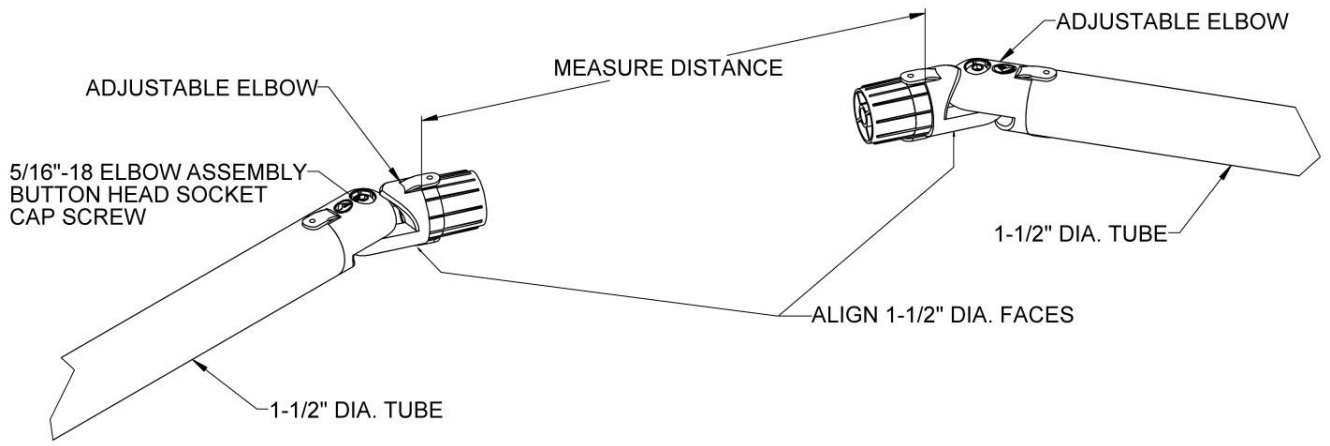

FIG. 2.1

2.7. Insert the disassembled adjustable elbow halves into each end of the cut tube until fully engaged (FIG. 2.2).

2.8. Rotate the adjustable elbow halves in the cut tube as needed to install the assembly back in place between the two tubes being connected.

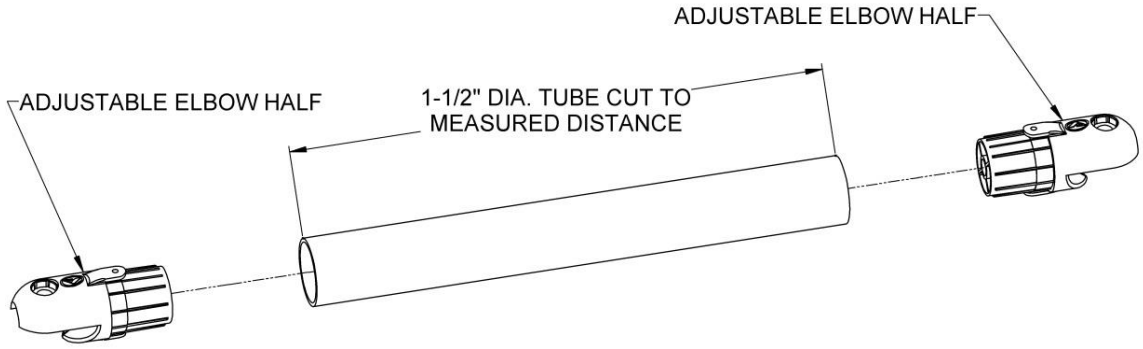

FIG. 2.2

2.9. Reassemble the adjustable elbow by inserting the 5/16”-18 elbow assembly screws and nuts back into the elbow and tighten securely (FIG. 2.3).

2.10. Drive four #10-18 x 1/2” self-drilling, self-tapping pan head Phillips screws into the divots in the four adjustable elbow attachment tabs. Tighten securely but use caution not to overtighten and strip the threads (FIG. 2.3).

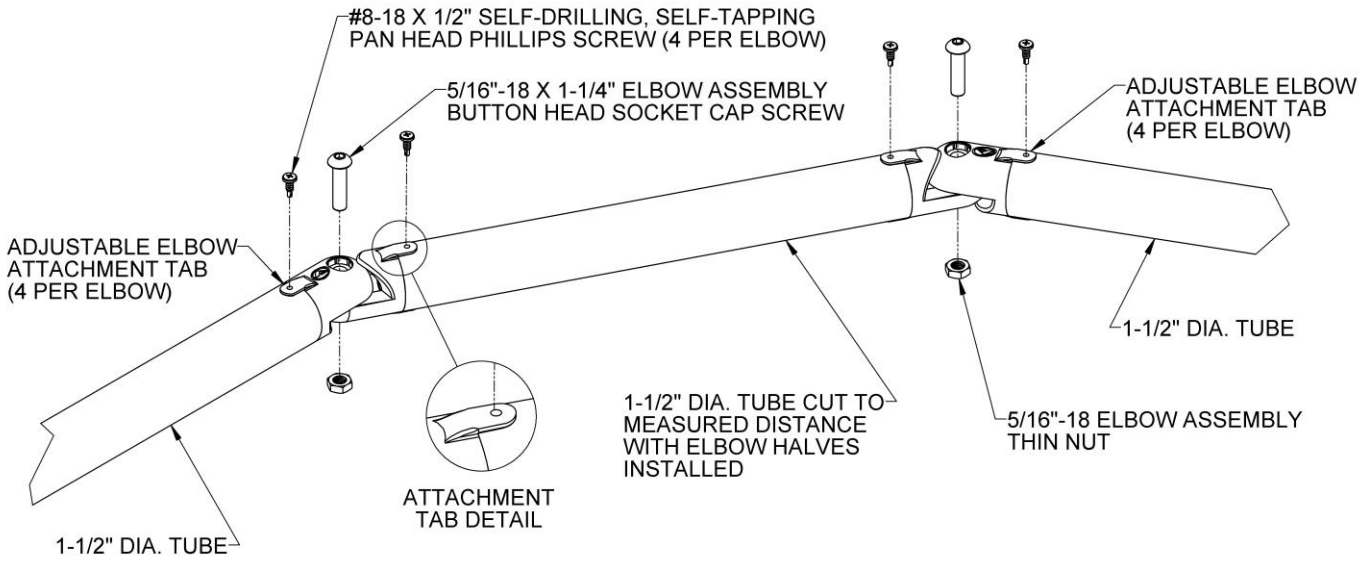

FIG. 2.3

3. CONNECT 1-1/2” DIAMETER TUBE TO ANGLE POST

3.1. The procedure for connecting a tube to an angle post is the same regardless of where in the system the connection is but is commonly found where a ramp meets a platform. First insert an adjustable elbow into the end of the tube which will be connected to the angle post (FIG. 3.1).

3.2. Disassemble a closure elbow and attach the shorter half with the flat face to the angle post using a 5/16”-18 x 3/4” hex bolt and 5/16” flat washer oriented as shown (FIG. 3.1). The hex bolt threads into the 5/16”-18 internal threaded insert in the closure elbow half. Tighten the hex bolt enough to hold the elbow half in place but still allow it to rotate.

3.3. Reassemble the closure elbow using the 5/16”-18 elbow assembly screw and nut but do not tighten fully at this time (FIG. 3.2).

3.4. Loosen (but do not remove) the 5/16”-18 elbow assembly screw in the adjustable elbow, align the 1-1/2” diameter face of the adjustable elbow with the 1-1/2” diameter face of the closure elbow and make sure the opposing flat faces are parallel then retighten the assembly screws (FIG. 3.2).

3.5. Measure the distance between the two 1-1/2” diameter faces (FIG. 3.2).

FIG. 3.1

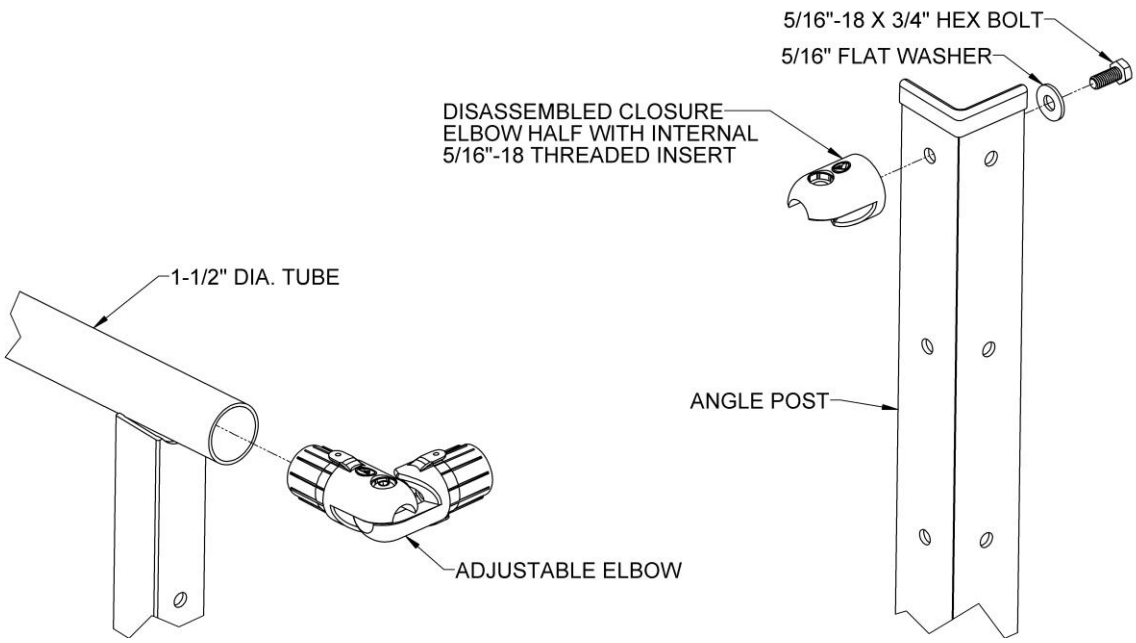

FIG. 3.2

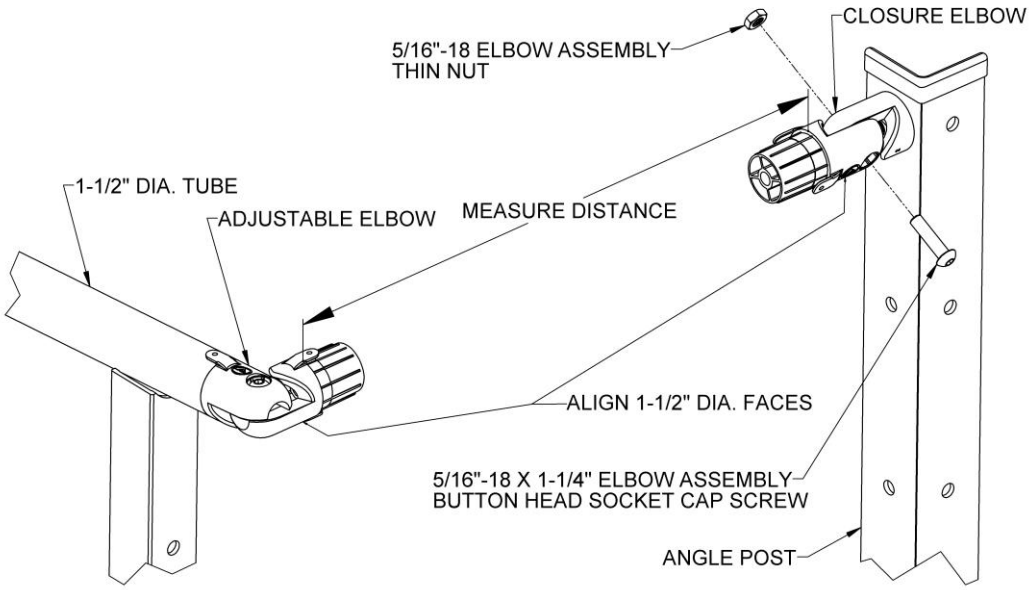

3.6. Cut a tube to fit the distance measured in the previous step.
3.7. Using a metal file, smooth all sharp edges from cutting the tube.
3.8. Disassemble the adjustable elbow and the closure elbow by removing the 5/16”-18 elbow assembly screws and nuts but do not remove the adjustable elbow halve from the tube or the closure elbow half from the angle post.
3.9. Insert the disassembled adjustable elbow halves into each end of the cut tube until fully engaged (refer back to FIG. 2.2).
3.10. Rotate the adjustable elbow halves in the cut tube as needed to install the assembly in place between the tube and the angle post.
3.11. Reassemble the adjustable elbow and closure elbows by inserting the 5/16”-18 elbow assembly screws and nuts back into the elbow and tightening securely (FIG. 3.3).
3.12. Double check that all fasteners are tightened securely.
3.13. Drive #10-18 x 1/2” self-drilling, self-tapping pan head Phillips screws into the divots in the four adjustable elbow attachment tabs and the two attachment tabs on the closure elbow. Tighten securely but use caution not to overtighten and strip the threads (FIG. 3.3).

FIG. 3.3

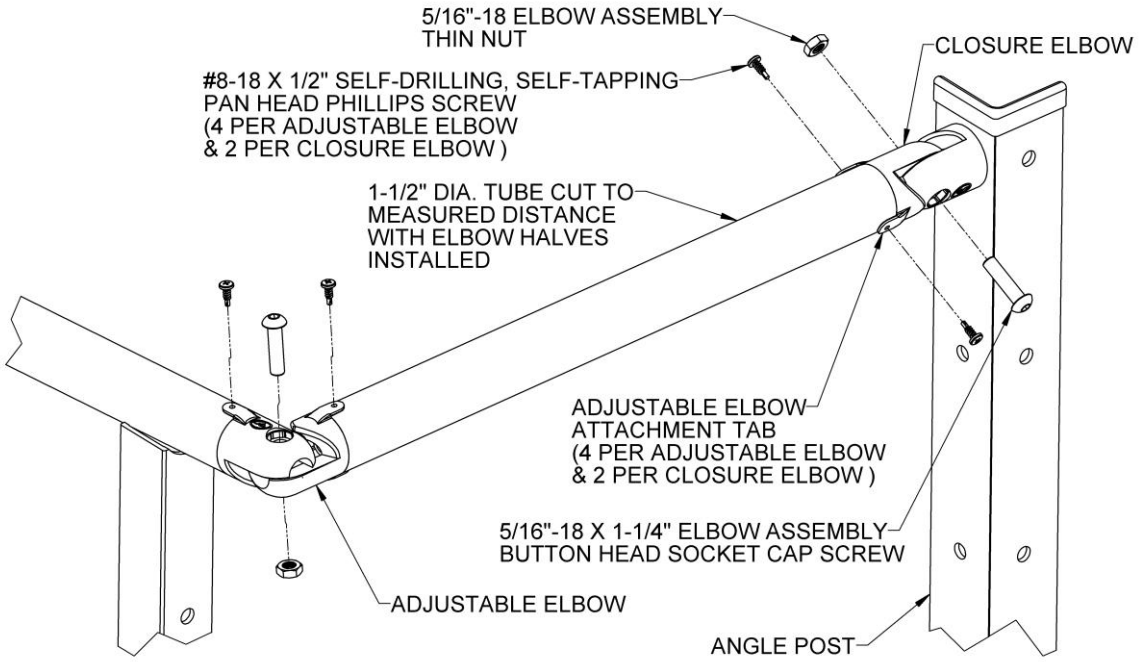

4. CONNECT 1-1/2” DIAMETER TUBE TO ANGLE POST WITH ADJUSTABLE ELBOW

4.1. The adjustable elbow can also be used as a “closure” elbow when used with the elbow collar. The procedure for connecting a tube to an angle post using an adjustable elbow begins in the same manner as when using a closure elbow by first inserting an adjustable elbow into the end of the which will be connected to the angle post (FIG. 4.1).

4.2. Disassemble an adjustable elbow and slide the elbow collar over the portion with serrations which would normally be inserted into a tube (FIG. 4.1).

4.3. Attach the adjustable elbow with collar installed to the angle post using a 5/16”-18 x 2-1/4” long hex bolt, 5/16”-18 locknut, and 5/16” flat washer oriented as shown (FIG. 4.1). The locknut will go into a recess in the adjustable elbow half which prevents it from spinning. Tighten the hex bolt enough to hold the elbow half in place but still allow it to rotate.

FIG. 4.1

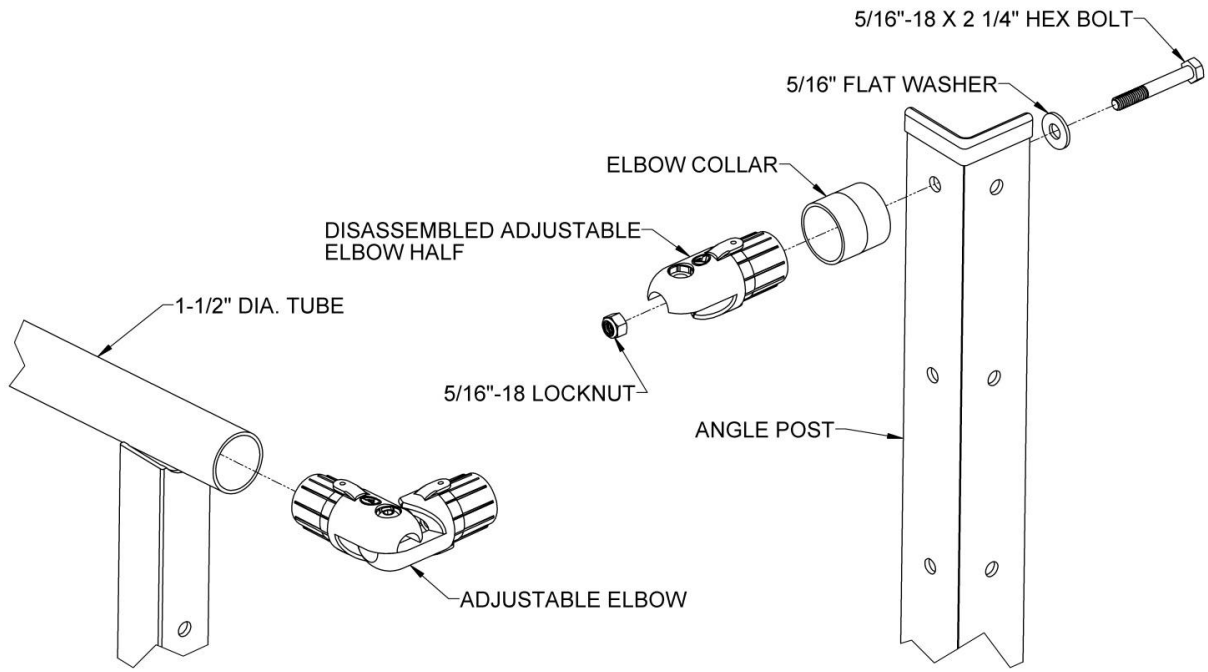

4.4. Loosen (but do not remove) the 5/16”-18 elbow assembly screw of the adjustable elbow installed in the tube. Align the 1-1/2” diameter faces of the adjustable elbows and make sure the opposing flat faces are parallel, then retighten the assembly screws (FIG. 4.2).
4.5. Measure the distance between the two 1-1/2” diameter faces (FIG. 4.2).
4.6. Cut a tube to fit the distance measured in the previous step.
4.7. Using a metal file, smooth all sharp edges from cutting the tube.
4.8. Disassemble the adjustable elbows by removing the 5/16”-18 elbow assembly screws and nuts but do not remove the adjustable elbow halve from the 1-1/2” diameter tube or the adjustable elbow half with collar from the angle post.
4.9. Insert the disassembled adjustable elbow halves into each end of the cut tube until fully engaged (refer back to FIG. 2.2).
4.10. Reassemble the adjustable elbow with collar using the 5/16”-18 elbow assembly screw and nut but do not tighten fully at this time (FIG. 4.2).
4.11. Rotate the adjustable elbow halves in the cut tube as needed to install the assembly in place between the and the angle post.

FIG. 4.2

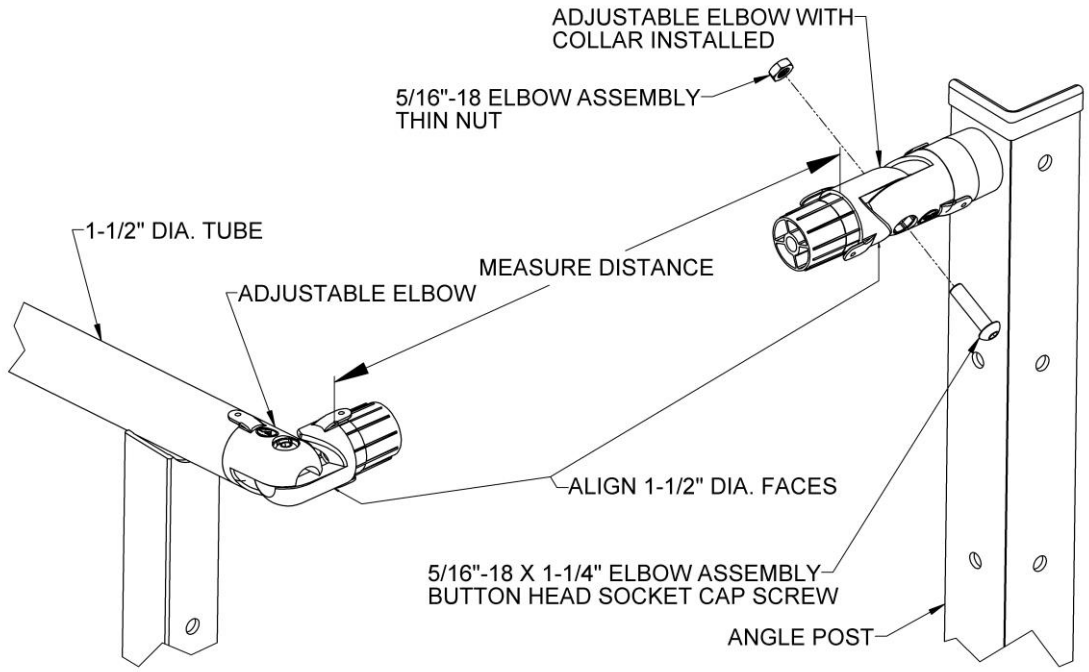

4.12. Reassemble the adjustable elbows by inserting the 5/16”-18 elbow assembly screws and nuts back into the elbow and tightening securely (FIG. 4.3).
4.13. Double check that all fasteners are tightened securely.
4.14. Drive #10-18 x 1/2” self-drilling, self-tapping pan head Phillips screws into the divots in the four adjustable elbow attachment tabs in each elbow. Tighten securely but use caution not to overtighten and strip the threads (FIG.4.3).
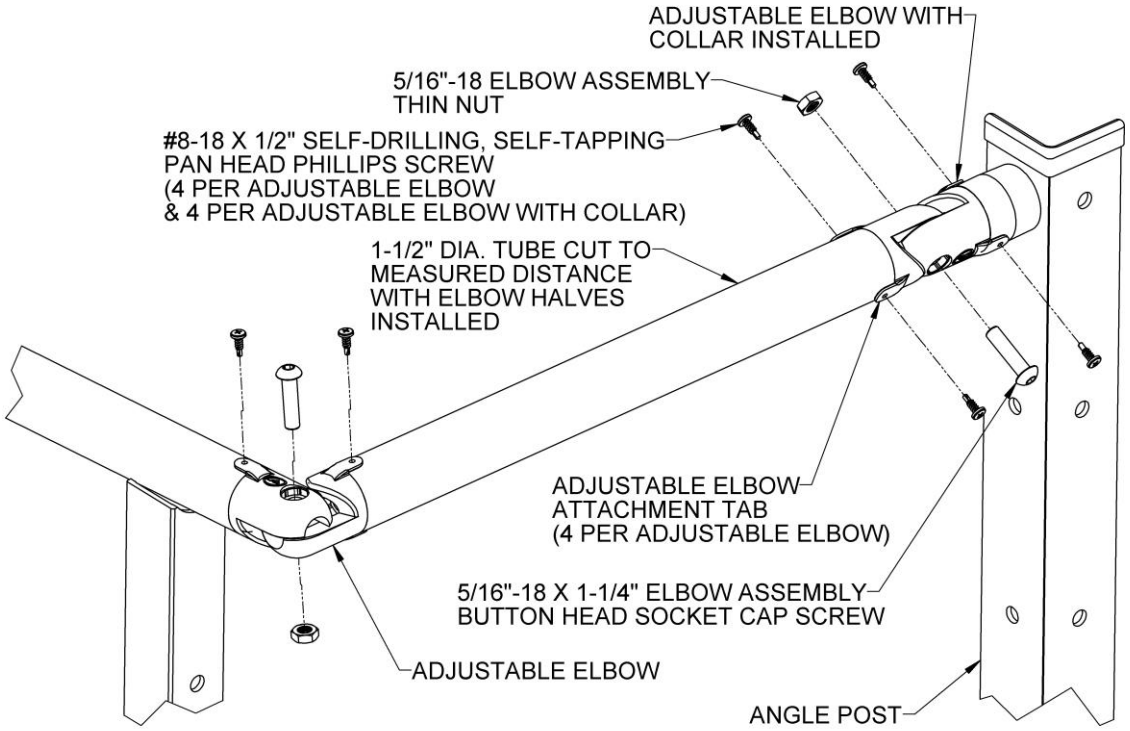
FIG. 4.3